ROBOLAUNCH

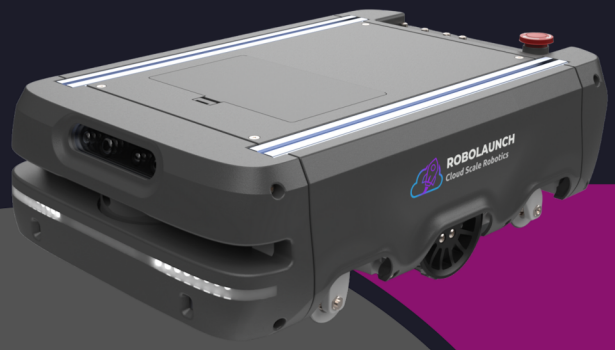

Cloudy Mini-AGV

Technical Specifications

(Cloudy Mini-AGV MKII & MKIII)

Mustafa Kemal Mah. Dumlupınar
Blv. No: 280/G ODTU Teknokent
Ankara, Turkey

info@robolaunch.io
github.com/robolaunch
robolaunch.io

KEY FEATURES

Cloudy Mini-AGV is a fully 3D printable, open-source and autonomous robotics learning and development robot based on ROS framework, allowing users to fully customize and modify the robot for their own educational purposes.

Cloudy Mini-AGV is a modular, ROS 2 native robot designed specifically for robotics education and development.

Open-Source	By leveraging hardware (MKII and MKIII) and software design, you can modify and create an entirely new robot for your own use case
Accessible	Build your own robot! Easy to produce with 3D printers and fun to assemble with our open-source guides
Affordable	Buy your robot from us! Starting from $1340, Cloudy Mini-AGV is available in many options in the robolaunch Store
Scalable	Suitable for customization with different electronical and mechanical hardware parts
Rich Resources	Comprehensive set of materials, tutuorials and examples to make easier to getting started from assembly to programming

WHAT CAN BE ACHIEVED with CLOUDY MINI-AGV?

Cloudy Mini-AGV is a highly flexible and adaptable robot suitable for a wide range of users, including students, educators, hobbyists and professionals. It utilizes micro ROS, ROS 2, Nav 2, ROS 2 Control, NVIDIA, and robolaunch Platform, to enable a broad range of functionalities:

- Basics: ROS learning
- Teleoperation: robot remote control over robolaunch Platform
- Map Building: make maps of environments for the robot to use
- Autonomous Path Planning and Navigation: Cloudy Mini-AGV moves autonomously around your lab, class or office
- Tele-Viewing: see what your Cloudy Mini-AGV robot sees over robolaunch Platform
- Simultaneous Localization and Mapping (SLAM): Cloudy Mini-AGV autonomously explores unknown places
- Computer Vision: Cloudy Mini-AGV recognizes objects in its environment and avoids obstacles for any indoor mobile robotics application.

CLOUDY MINI-AGV MKII vs. MKIII

	MK II	MK III
Dimensions (LXWXH)	Approx. 340 x 240 x 110 mm	Approx. 380 x 230 x 140 mm
Battery	24V (6S1P)	12V (3S2P)
Motor Power (Tork)	2.6 kgcm	14 kgcm
Motor Type	Step Motor	DC Motor
Motor Driver	DRV 8825 (max. 1,2A)	L298P (max. 2A)
Lidar Positioning	Front View (180°)	360° View
Drive Mode	6 Wheel independent	Triple Swingarm
3D Printable Amount	More Concentrated	Less Mechanical Part

CLOUDY MINI-AGV MKII

TECHNICAL SPECIFICATIONS

Dimensions (LxWxH)	Approx. 340 x 240 x 110 mm
Weight (kg)	Approx. 4 kg
Payload (kg)	Approx. 20 kg
Maximum Speed	1 m/s
Operating Time	Approx. 2 hours
Drive Power	50W Peak
Battery	24V (6S1P)
Voltage Sources	12V / 5V / 3.3V
Wheel Setup	Differential Drive (Drive Trains (x2), Caster Wheels (x4))
Sensors	Voltage Sensor, Gesture-Distance Sensor
Communication	Wifi
Microcontroller (x1)	Wemos D1 R32 (ESP32)
Shield (x2)	Arduino Uno CNC Shield
Lights (x4)	8 Led Strip
Multiplexer (x1)	Adafruit tca9548a
Cables (x1 each)	Ethernet panel mount, USB panel mount, HDMI panel mount
Motor Driver (x2)	DRV 8825
RF Receiver (x1)	Flysky ia6b (with no controller)
Fan (x1)	Fan ~ 60x60x15
Voltage Regulator (x1)	Hobbywing / Matek Mini Power Hub
Screen (x1)	Oled Display 128x64
SBC (Optional)	Orange Pi 5 8 GB
Operating System	Ubuntu 20.4
Lidar (Optional)	YDLIDAR T-Mini Pro
Stereo Camera (Optional)	YDLIDAR OS30A

TECHNICAL DRAWINGS

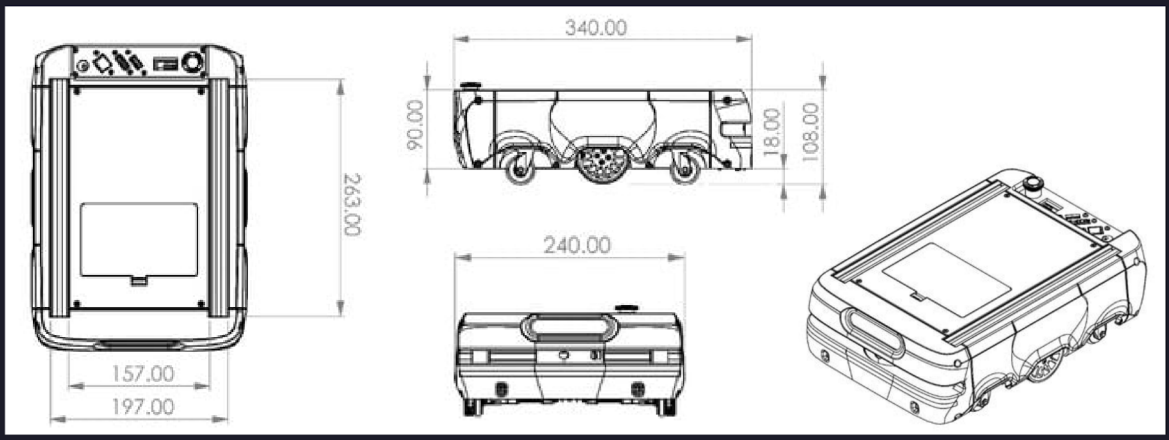

Mustafa Kemal Mah. Dumlupınar
Blv. No: 280/G ODTU Teknokent
Ankara, Turkey

info@robolaunch.io
github.com/robolaunch
robolaunch.io

CLOUDY MINI-AGV MKIII

TECHNICAL SPECIFICATIONS

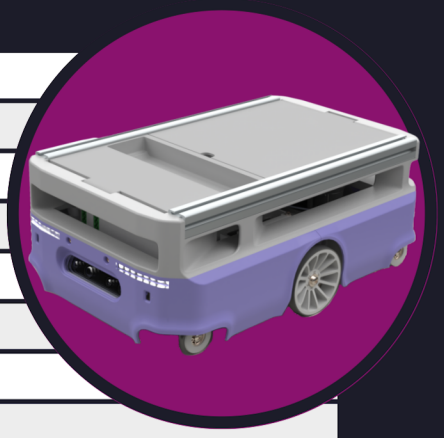

Dimensions (LxWxH)	Approx. 380 x 230 x 140 mm
Weight (kg)	Approx. 4 kg
Payload (kg)	Approx. 20 kg
Maximum Speed	1 m/s
Operating Time	Approx. 2 hours
Drive Power	50W Peak
Battery	12V (3S2P)
Voltage Sources	12V / 5V / 3.3V
Wheel Setup	Differential Drive (Drive Trains (x2), Caster Wheels (x4))
Sensors	Voltage Sensor, Gesture-Distance Sensor
Communication	Wifi
Embedded	Wemos D1 R32 (ESP32)
Shield (x2)	Arduino Uno L298P Shield
Lights (x4)	8 Led Strip
Multiplexer (x1)	PCA9548a I2C Mux
RF Receiver (x1)	Flysky ia6b
Fan (x1)	Fan ~ 60x60x15
Voltage Regulator (x1)	Hobbywing / Matek Mini PDB
Screen (x1)	Oled Display 128x64
SBC (Optional)	Orange Pi 5 8 GB
Operating System	Ubuntu 20.4
Lidar (Optional)	YDLIDAR T-Mini Pro
Stereo Camera (Optional)	YDLIDAR OS30A

TECHNICAL DRAWINGS

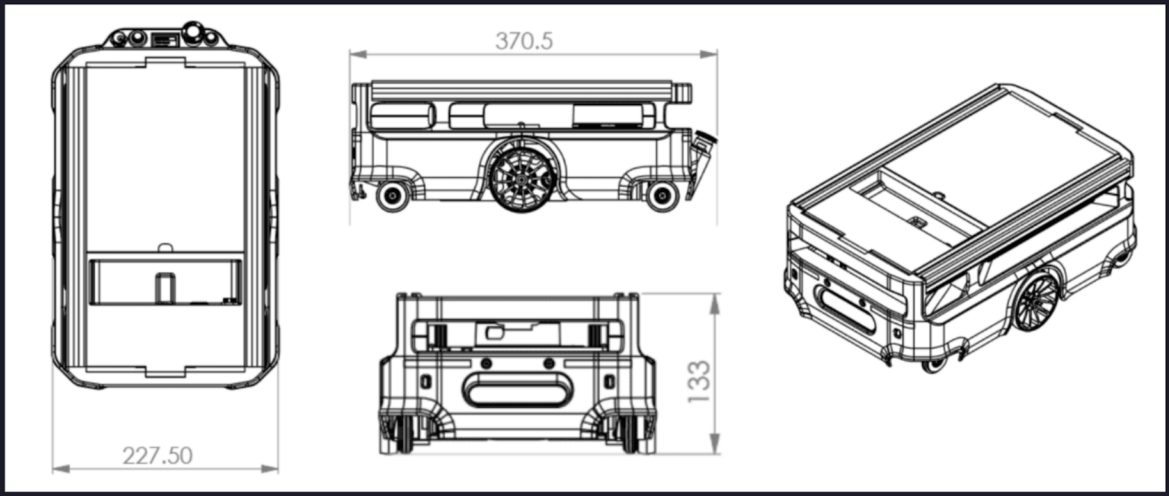

Mustafa Kemal Mah. Dumlupınar
Blv. No: 280/G ODTU Teknokent
Ankara, Turkey

info@robolaunch.io
github.com/robolaunch
robolaunch.io